Cambridge Assessment International Education

Cambridge International AS & A Level

CANDIDATE NAME

CENTRE NUMBER

CANDIDATE NUMBER

8561520793

PHYSICS **9702/51**

Paper 5 Planning, Analysis and Evaluation **October/November 2022**

1 hour 15 minutes

You must answer on the question paper.

No additional materials are needed.

INSTRUCTIONS

- Answer **all** questions.
- Use a black or dark blue pen. You may use an HB pencil for any diagrams or graphs.
- Write your name, centre number and candidate number in the boxes at the top of the page.
- Write your answer to each question in the space provided.
- Do **not** use an erasable pen or correction fluid.
- Do **not** write on any bar codes.
- You may use a calculator.
- You should show all your working and use appropriate units.

INFORMATION

- The total mark for this paper is 30.
- The number of marks for each question or part question is shown in brackets [ ].

This document has **8** pages.

DC (CE/SG) 320624
© UCLES 2022

[Turn over

1 A thin copper sheet is suspended from a small hole near the top of the sheet and placed in a magnetic field, as shown in Fig. 1.1.

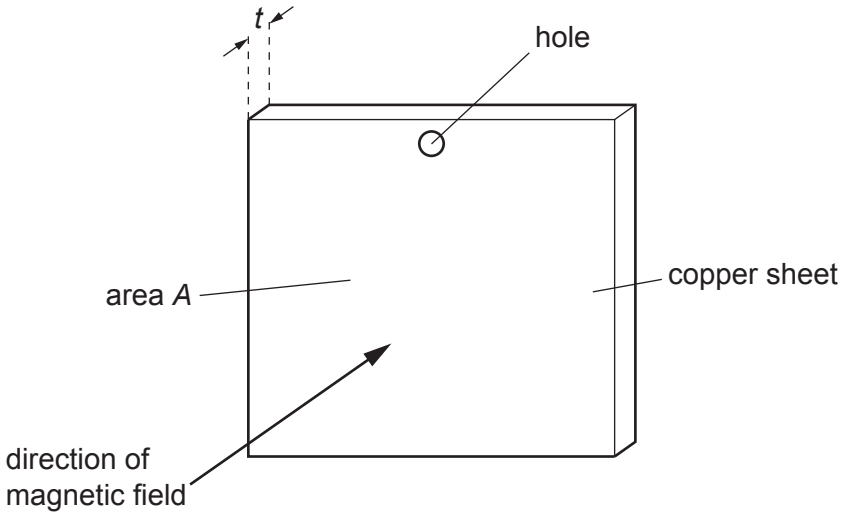

Fig. 1.1 (not to scale)

The sheet has area A and thickness t.

The sheet is displaced from its equilibrium position through a horizontal distance s_0 and then released so that it oscillates perpendicular to the direction of the magnetic field. The horizontal distance s of the sheet from its equilibrium position is measured after five complete oscillations.

It is suggested that s is related to A by the relationship

$$s = s_0 e^{-ABKt}$$

where B is the magnetic flux density of the field and K is a constant.

Plan a laboratory experiment to test the relationship between s and A.

Draw a diagram showing the arrangement of your equipment.

Explain how the results could be used to determine a value for K.

In your plan you should include:

- the procedure to be followed
- the measurements to be taken
- the control of variables
- the analysis of the data
- any safety precautions to be taken.

© UCLES 2022

Diagram

.....

.....

.....

.....

.....

.....

.....

.....

.....

.....

.....

.....

.....

.....

.....

.....

.....

2 A student investigates a circuit containing resistors and a metal wire as shown in Fig. 2.1.

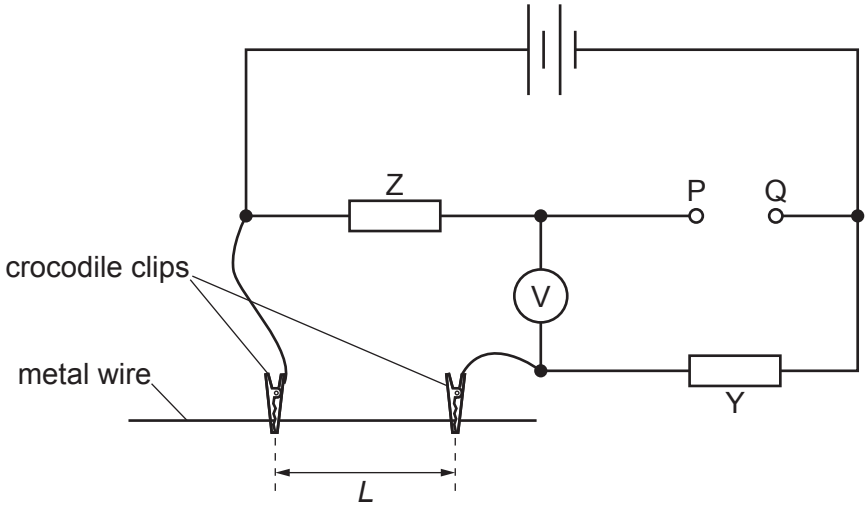

Fig. 2.1

Resistors Y and Z have resistances Y and Z respectively.

The student connects a resistor of resistance R between P and Q.

The student then adjusts the length of the wire between the crocodile clips until the voltmeter reads zero. The student measures the length L of wire between the crocodile clips.

The student repeats the experiment with different values of R.

It is suggested that L and R are related by the equation

$$\frac{Z}{R} = \frac{4\rho L}{\pi Y d^2}$$

where d is the diameter of the wire and ρ is the resistivity of the metal.

(a) A graph is plotted of L on the y-axis against $\frac{1}{R}$ on the x-axis.

Determine an expression for the gradient.

gradient = ... [1]

(b) Values of R and L are given in Table 2.1.

Each resistance value R has a percentage uncertainty of ±5%.

Table 2.1

R/Ω	$\frac{1}{R}/10^{-3}\,\Omega^{-1}$	L/cm
22		71.0
27		57.5
33		45.0
39		36.5
47		27.5
54		23.0

Calculate and record values of $\frac{1}{R}/10^{-3}\,\Omega^{-1}$ in Table 2.1.

Include the absolute uncertainties in $\frac{1}{R}$. [2]

(c) **(i)** Plot a graph of L/cm against $\frac{1}{R}/10^{-3}\,\Omega^{-1}$.

Include error bars for $\frac{1}{R}$. [2]

(ii) Draw the straight line of best fit and a worst acceptable straight line on your graph. Label both lines. [2]

(iii) Determine the gradient of the line of best fit. Include the absolute uncertainty in your answer.

gradient = ... [2]

© UCLES 2022

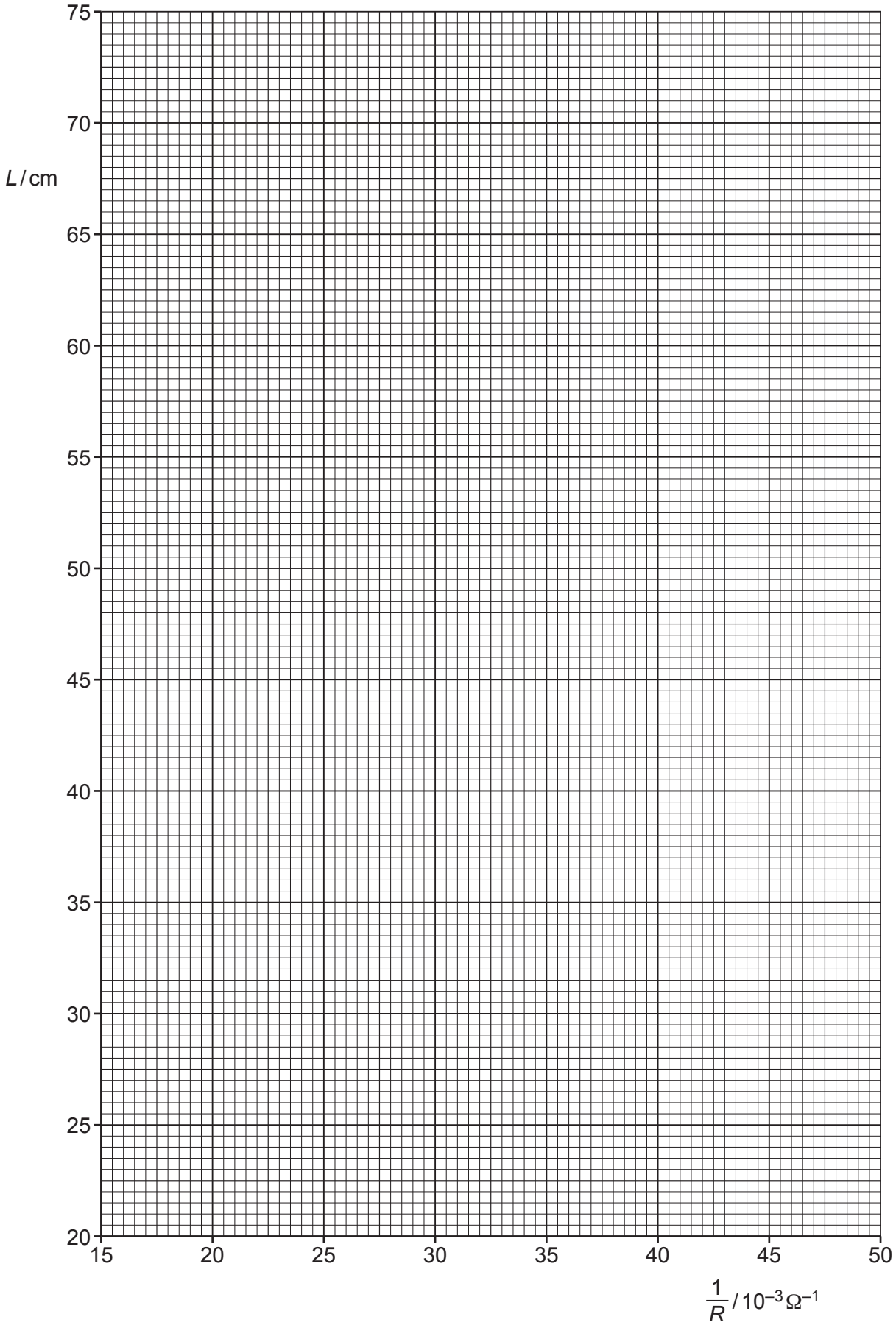
75
70
L / cm
65
60
55
50
45
40
35
30
25
20
15
20
25
30
35
40
45
50
1/R / 10^−3 Ω^−1

(d) The student measures the diameter of the wire. The student's values are:

0.263 mm 0.262 mm 0.263 mm 0.257 mm 0.262 mm 0.259 mm.

Determine the average diameter d. Include the absolute uncertainty in d.

d = ... mm [1]

(e) **(i)** Resistors Y and Z each have a resistance of 22 Ω ± 5%.

Using your answers to **(a)**, **(c)(iii)** and **(d)**, determine the value of ρ. Include an appropriate unit.

ρ = ... [2]

(ii) Determine the percentage uncertainty in ρ.

percentage uncertainty in ρ = ... % [1]

(f) Determine the resistance R that would give a value of L of 95.0 cm. Include the absolute uncertainty in your answer.

R = ... Ω [2]

[Total: 15]

To avoid the issue of disclosure of answer-related information to candidates, all copyright acknowledgements are reproduced online in the Cambridge Assessment International Education Copyright Acknowledgements Booklet. This is produced for each series of examinations and is freely available to download at www.cambridgeinternational.org after the live examination series.

© UCLES 2022